Index

Page	Schematics Page Name
01	Cover Sheet / Revision History
02	Connectors
03	ICs_and_Power
04	XMC4200
05	XMC4200_Debug

01_Revision_History.SchDoc

Revision History

Rev.	Rel.	Date	Author	Description	Page(s)
1.0	RC01	2019/Aug	RB	Initial Version	
1.1	**Rel**	**2019/Oct**	**RB**	**Released Version**	

Platform2GO XMC4200-V1.1

[No Variations]

V1.1

Infineon Technologies AG
IFAG DES TCP EDS
Am Campeon 1-15, Munich

06/2019

Status
Open

LEGAL DISCLAIMER
THE INFORMATION GIVEN IN THIS DOCUMENT IS GIVEN FOR ILLUSTRATING PURPOSES ONLY. THE RECIPIENT OF THIS DOCUMENT MUST VERIFY ANY FUNCTION DESCRIBED HEREIN IN THE REAL APPLICATION. INFINEON TECHNOLOGIES HEREBY DISCLAIMS ANY AND ALL WARRANTIES AND LIABILITIES OF ANY KIND (INCLUDING WITHOUT LIMITATION WARRANTIES OF NON-INFRINGEMENT OF INTELLECTUAL PROPERTY RIGHTS OF ANY THIRD PARTY) WITH RESPECT TO ANY AND ALL INFORMATION GIVEN IN THIS DOCUMENT.

Infineon Technologies AG
IFAG DES TCP EDS
Am Campeon 1-15, Munich

Title	Platform2GO XMC4200-V1.1		
Variant	[No Variations]	Approved	<Appr.>
Size: A3	Document Name: 01_Revision_History.SchDoc	Rel.: R.B.	Rev.: V1.1

Author: R.B.
Date: 16.03.2020 Time: 13:00:34 SVN Revision: 7df790ea8d502e324ae2b6753ffcb

© Infineon Technologies AG 2019. All Rights Reserved.

Pinheader/Arduinopinheader

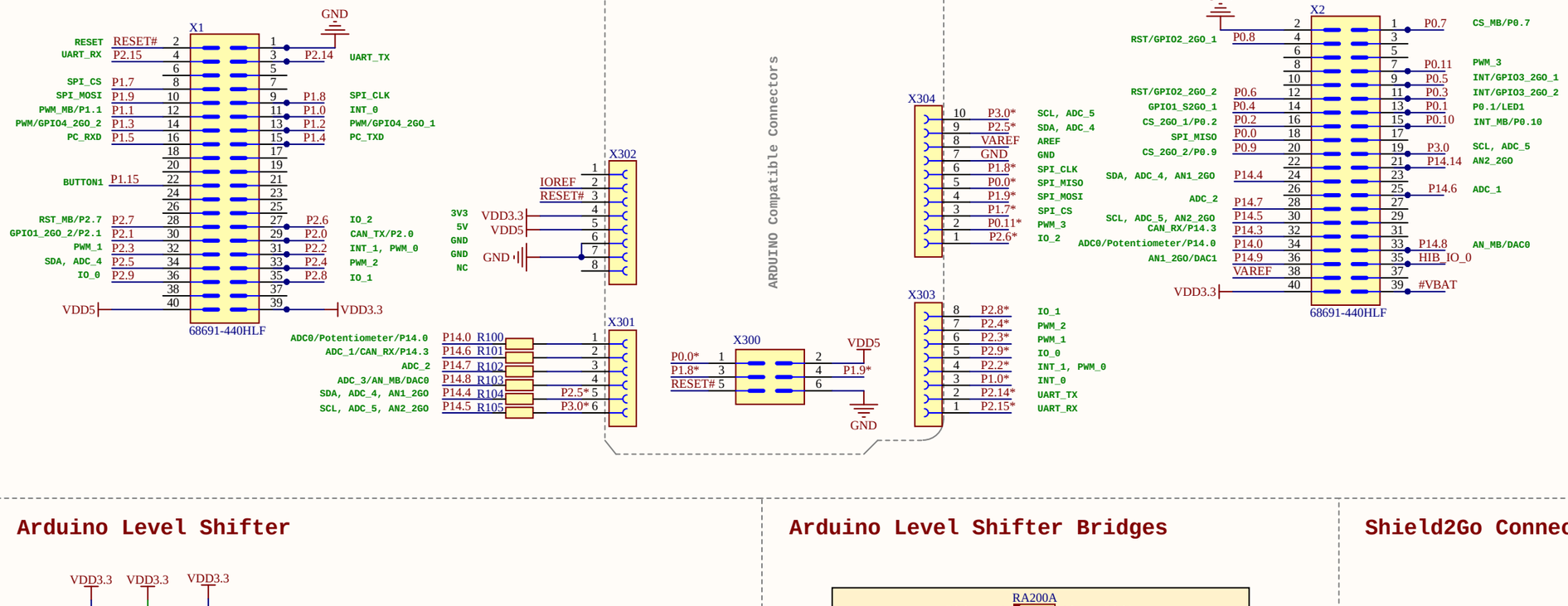

Pin Bridges

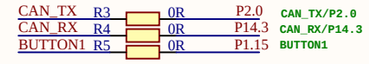

Microbus Connector

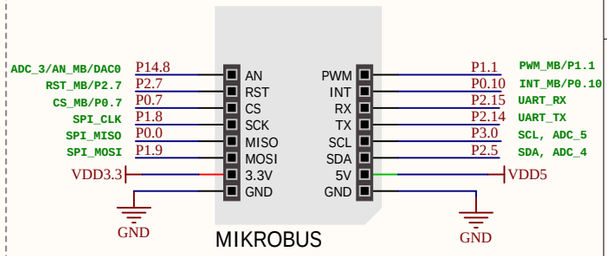

Arduino Level Shifter

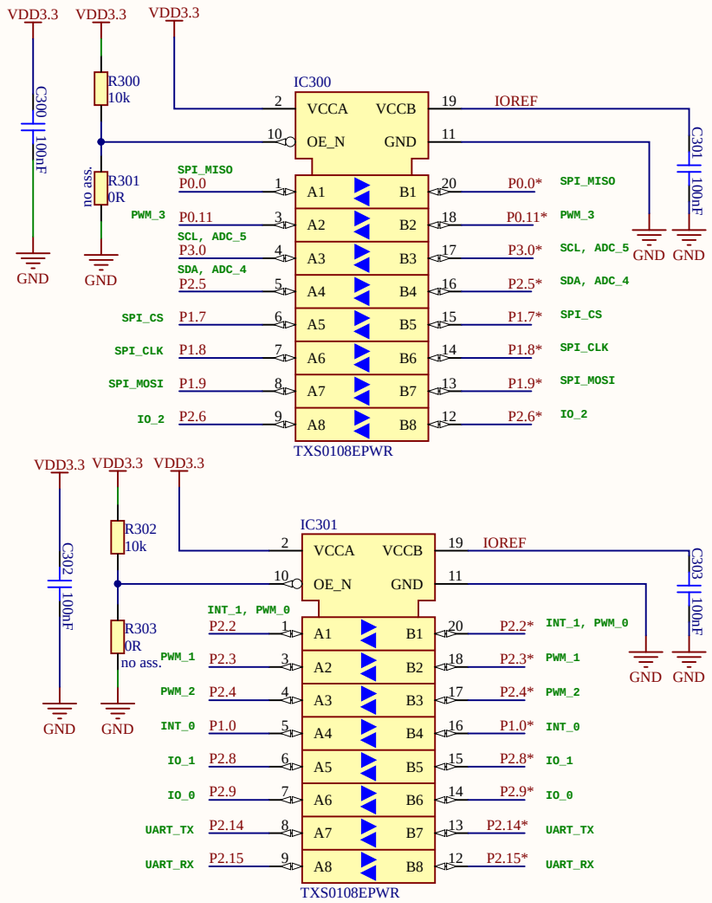

Arduino Level Shifter Bridges

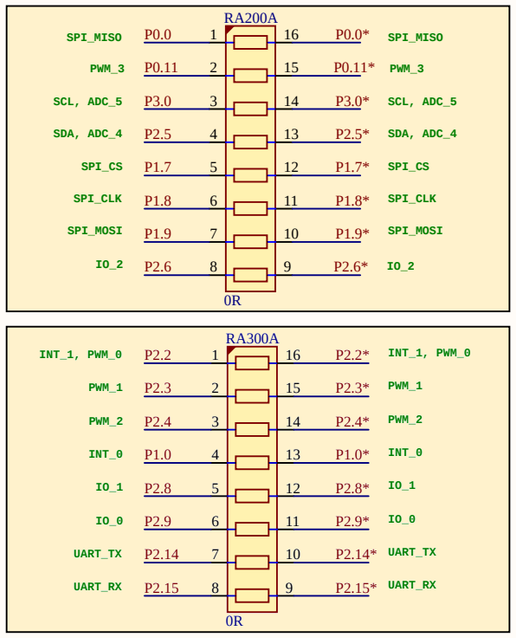

Arduino Level Jumper

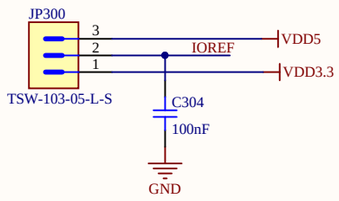

Shield2Go Connector

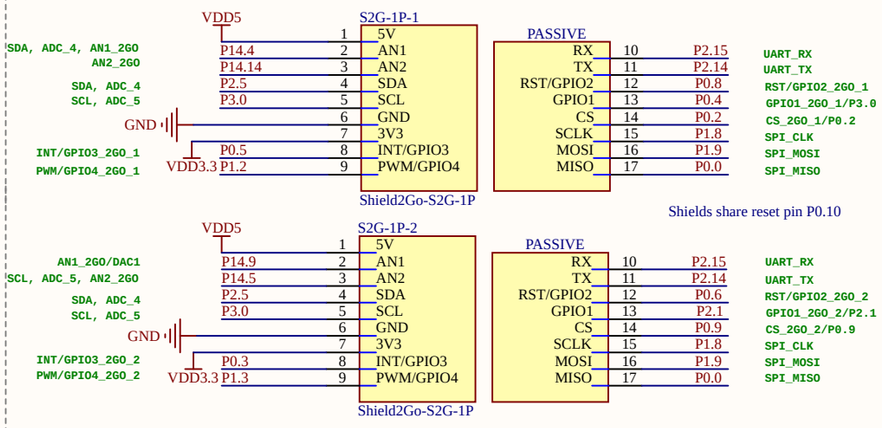

Status
Open

IFAG DES TCP EDS **Am Campeon 1-15, Munich**			
Title	Platform2GO XMC4200-V1.1		
Variant		Approved	
Size: A3	Connectors.SchDoc	Rel. Draft	Rev. V1.1
Author: J.Fischer			
Date: 16.03.2020 Time: 13:00:34	SVN Revision: 7df790ea8d502e324ae2b6753ffcb		
© Infineon Technologies AG 2019. All Rights Reserved.	Sheet 2 of 5		

CAN Transceiver

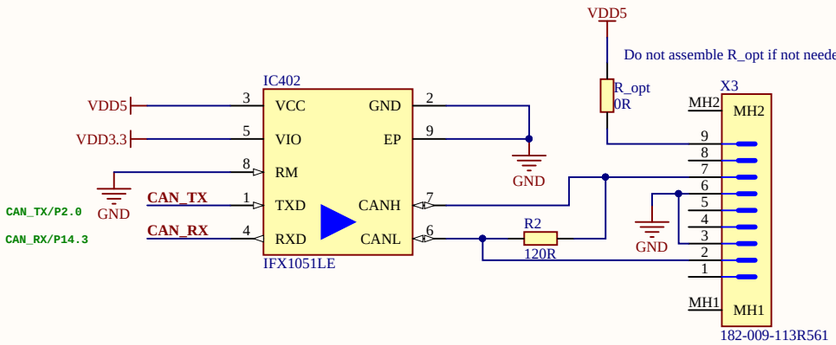

Power Target Device

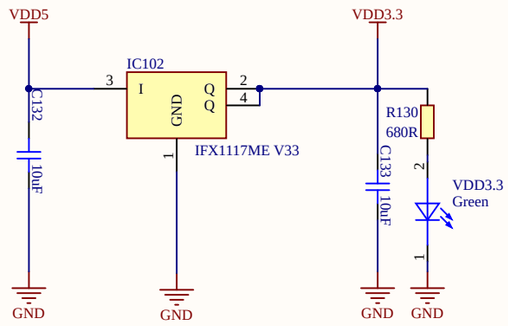

RTC Battery

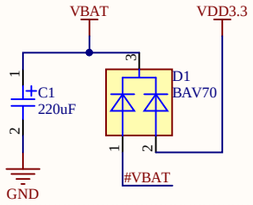

Status
Open

IFAG DES TCP EDS **Am Campeon 1-15, Munich**			
Title: Platform2GO XMC4200-V1.1			
Variant		Approved	
Size: A3	ICs_and_Power.SchDoc	Rel. Draft	Rev. V1.1
Author: J.Fischer			
Date: 16.03.2020 Time: 13:00:35	SVN Revision: 7df790ea8d502e324ae2b6753ffcb		
© Infineon Technologies AG 2019. All Rights Reserved.	Sheet 3 of 5		

USB Connector

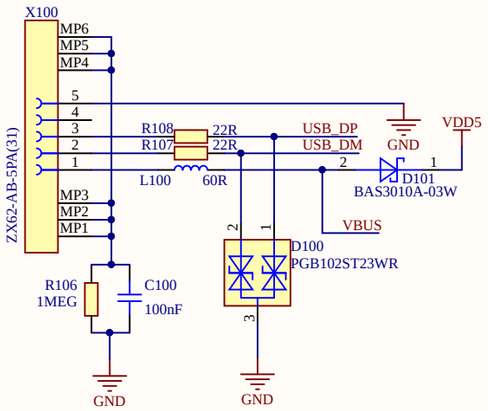

Power of XMC4400

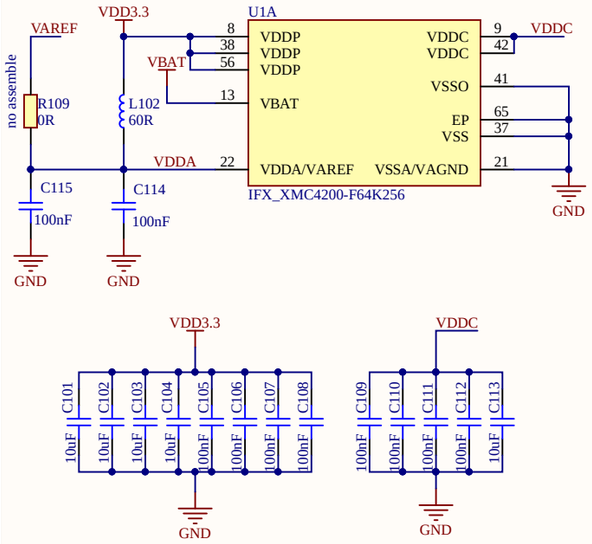

Microcontroller XMC4200

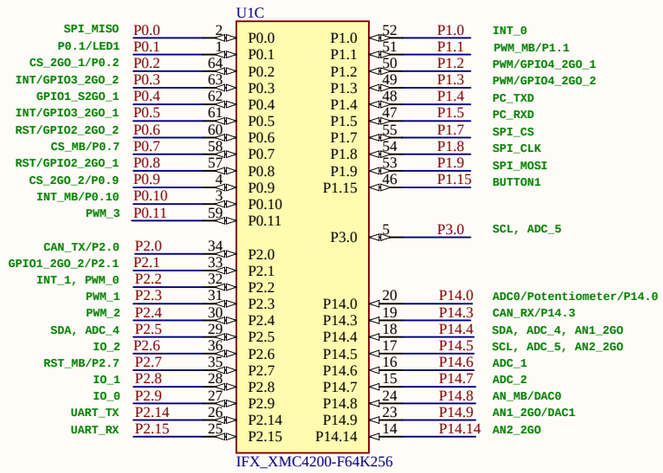

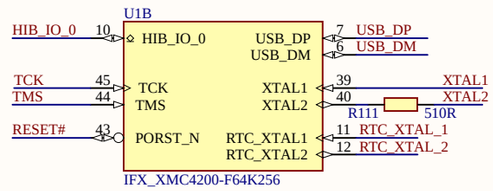

Potentiometer

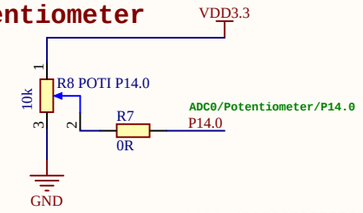

Clock

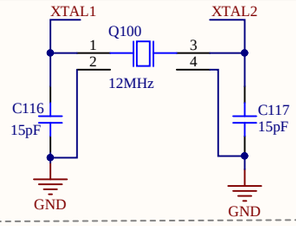

Buttons & LEDs

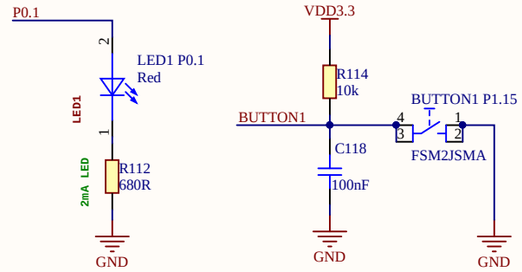

Reset

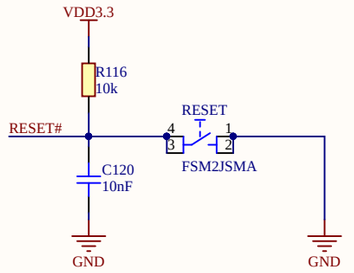

RTC Crystal

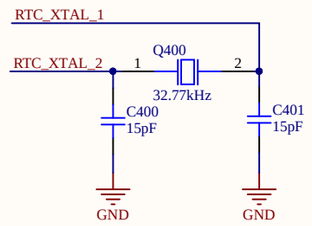

IFAG DES TCP EDS
Am Campeon 1-15, Munich

Title	Platform2GO XMC4200-V1.1		
Variant		Approved	
Size: A3	XMC4200.SchDoc	Rel. Draft	Rev. V1.1
Author: J.Fischer			
Date: 16.03.2020 Time: 13:00:35	SVN Revision: 7df790ea8d502e324ae2b6753ffcb		

© Infineon Technologies AG 2019. All Rights Reserved.

Sheet 4 of 5

Debug Micro-USB Connector

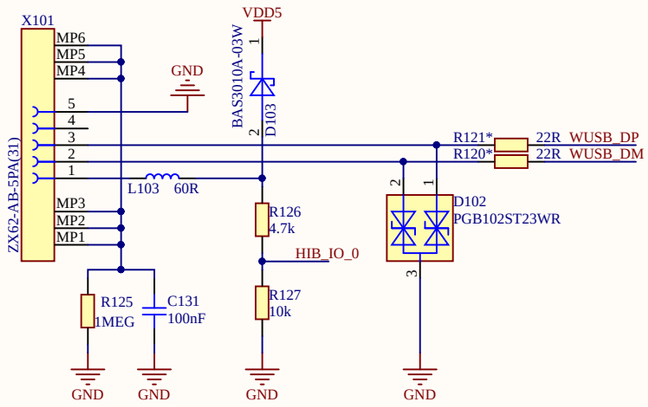

On-board Debugger

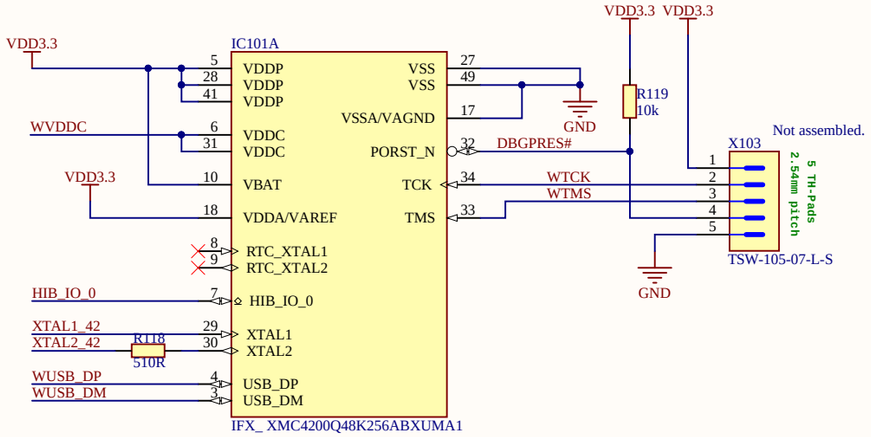

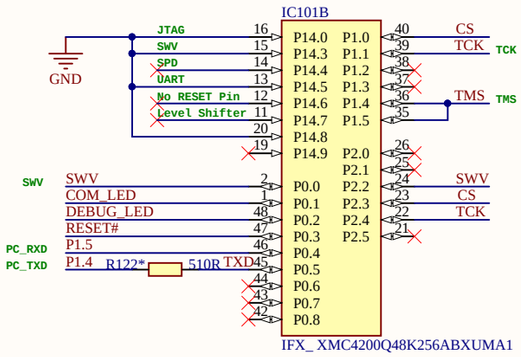

Caps of XMC4200

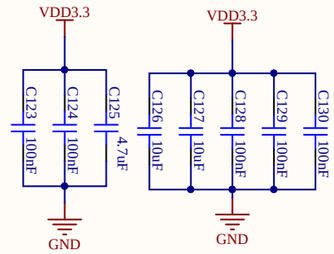

LED

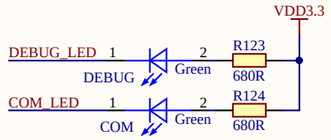

Clock

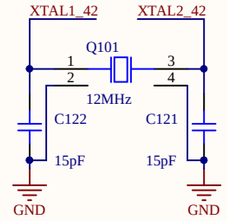

Cortex Debug

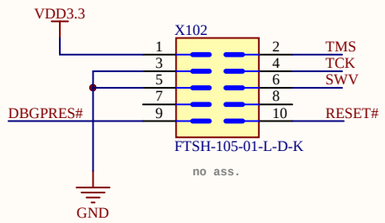

On-board Debugger Concept

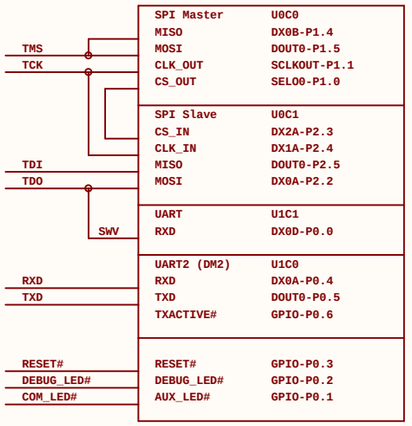

Status
Open

IFAG DES TCP EDS
Am Campeon 1-15, Munich

Title	Platform2GO XMC4200-V1.1		
Variant		Approved	
Size: A3	XMC4200_Debug.SchDoc	Rel. Draft	Rev. V1.1
Author: J.Fischer			
Date: 16.03.2020 Time: 13:00:35	SVN Revision: 7df790ea8d502e324ae2b6753ffcb		

© Infineon Technologies AG 2019. All Rights Reserved.

Sheet 5 of 5